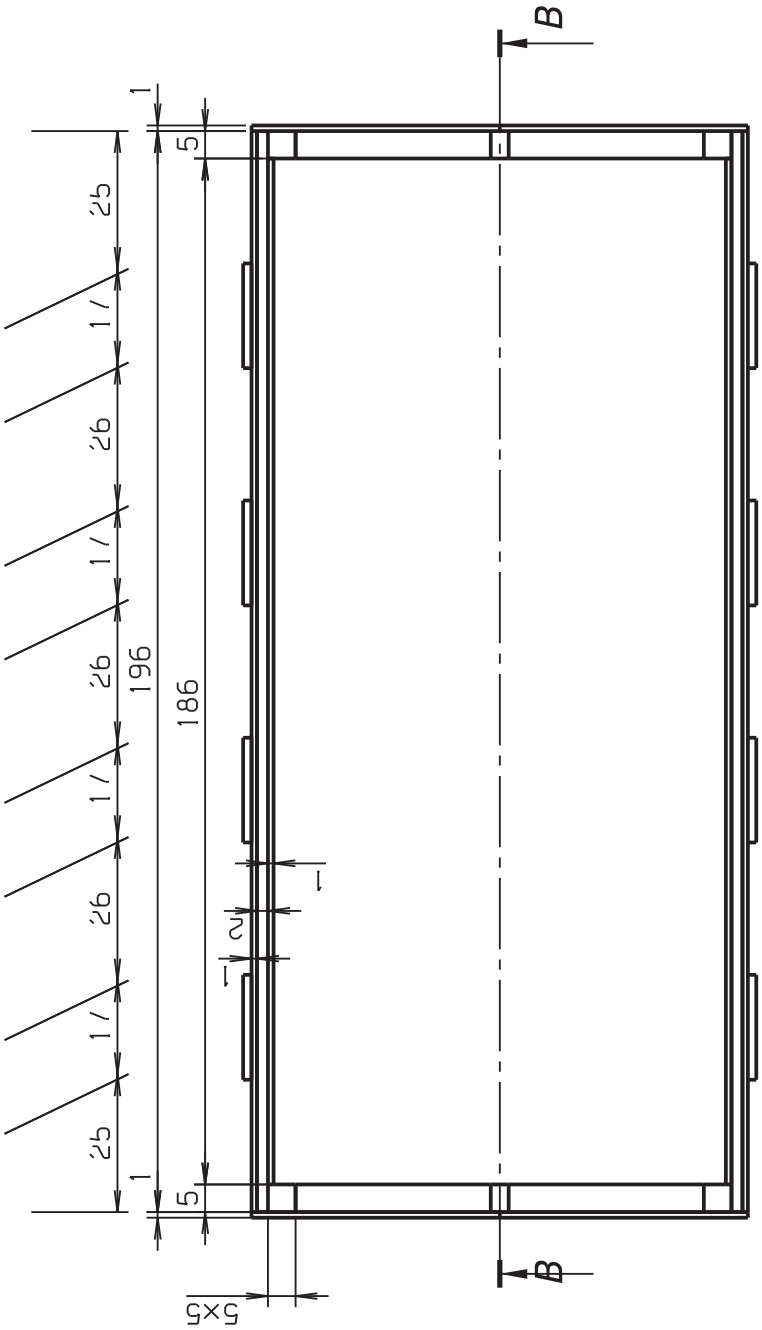
B
1
5
25
17
26
17
26
17
26
17
25
1
196
186
1
2
1
5
5×5
B

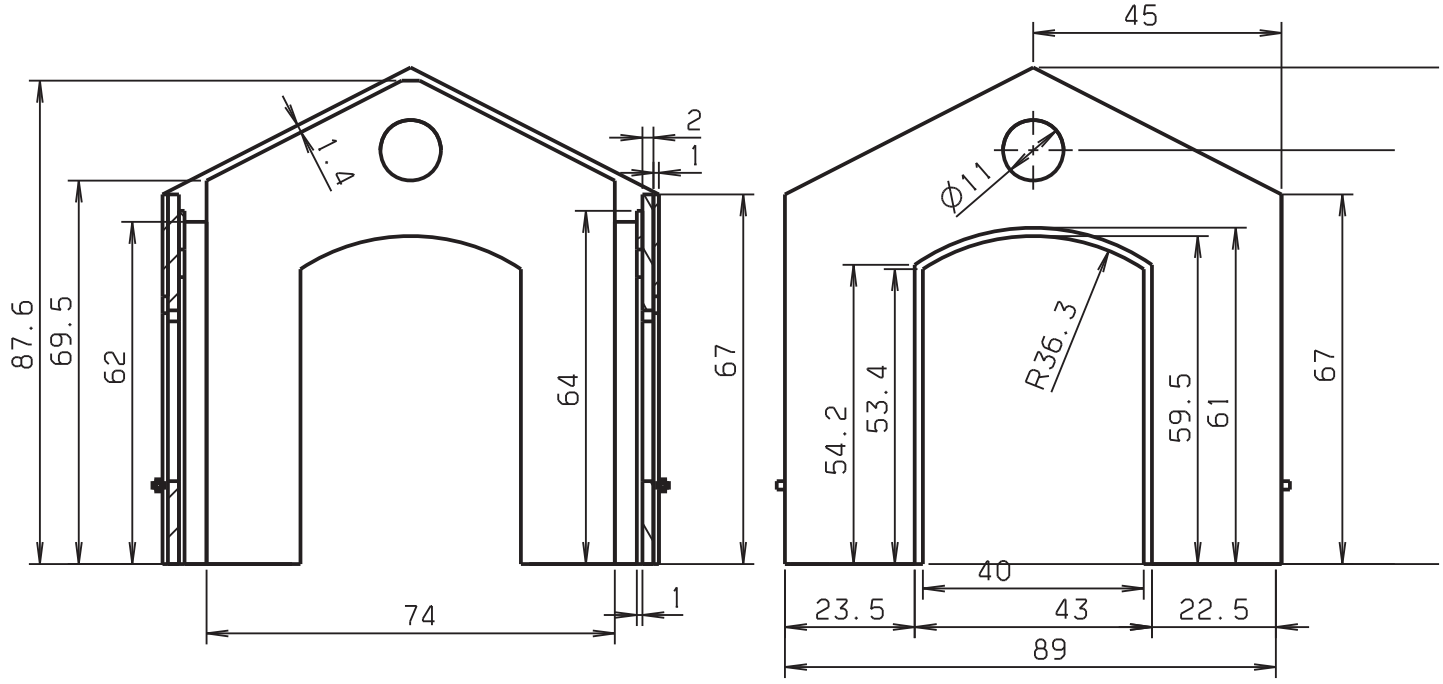
1.4
2
1
87.6
69.5
62
64
67
74
1
45
Ø11
R36.3
54.2
53.4
59.5
61
67
40
23.5
43
22.5
89